| RevNr. | Revision note | Date | Sign |
|---|---|---|---|

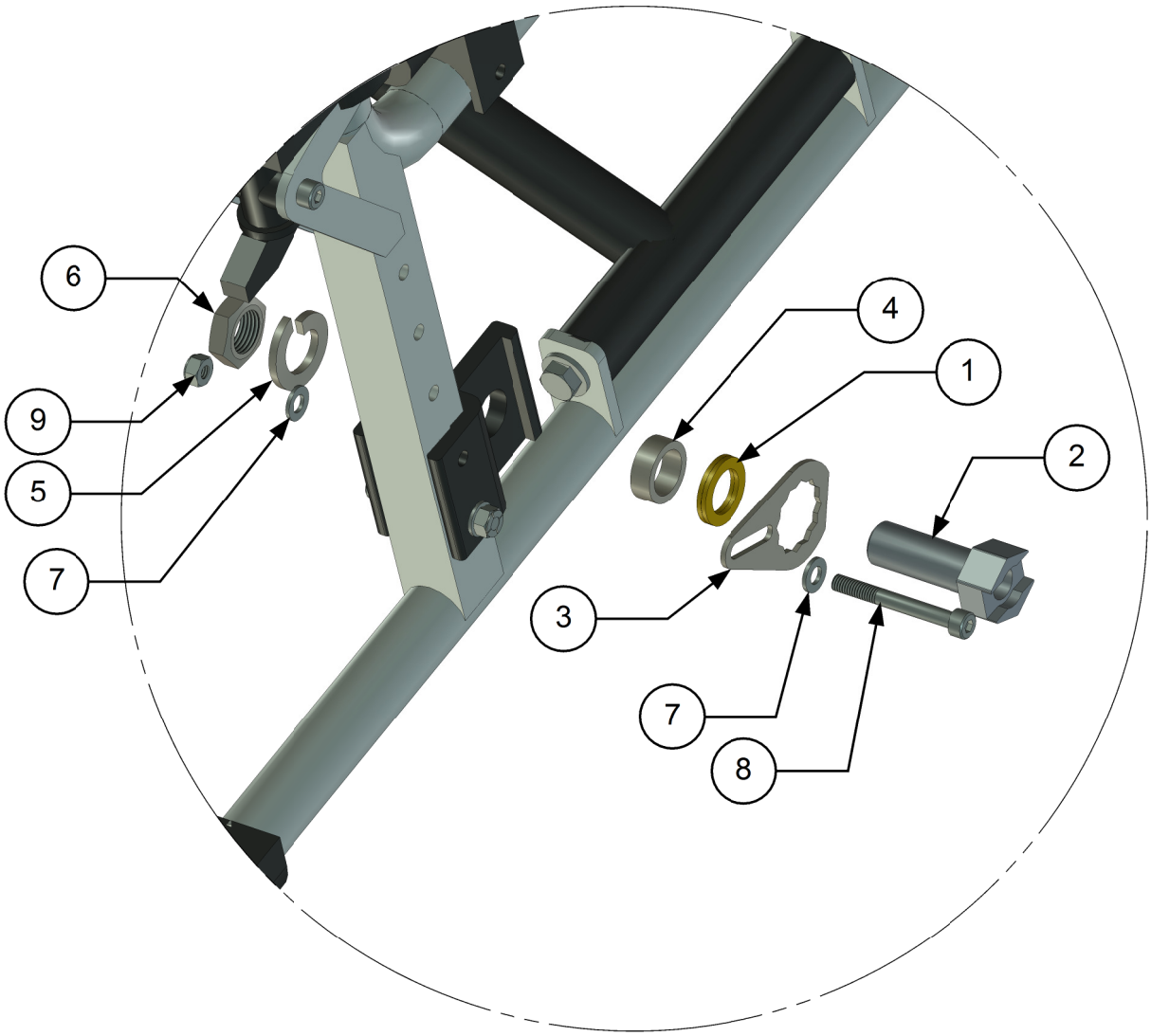


| Item No. | Part Numbe | Qty | Description |
|---|---|---|---|
| 1 | 405239 | 1 | Nordlock Bricka M16 |
| 2 | VH51001-04 | 1 | Navhylsa |
| 3 | VH52001-01 | 1 | Låsbricka |
| 4 | 100 400 006 | 1 | Distans |
| 5 | XSM16FJ | 1 | Fjäder Bricka M16 |
| 6 | XSM16M | 1 | Mutter M16X1 Låg |
| 7 | XSM6BR | 2 | Planbricka M6 |
| 8 | XSM6X50 | 1 | Skruv M6 x 50 |
| 9 | XSM6ML | 1 | Låsmutter M6 |

| | | | | |
|---|---|---|---|---|
| E | A4 | General Tolerances acc to : | | Material: Material |
| | Scale 1:2,5 | ISO 2768-1 medium | Drawn: RL / Checked: MJ | Dat.: 2012-09-27 |
| decon wheel | | Title: **Caneo B/E/L/S with Easywheel** | | Sheet 1: 1/1 / Rev.: 1 |
| | | | | Part Number: VH3030-72 |