REVISION HISTORY			
REV	DESCRIPTION	DATE	APPROVED
Rev0	Drawing created	2018-08-14	FH

ITEM	QTY	TITLE	PART NUMBER
15	4		XSM8M
14	4		XSM8BR A2
13	4		MC6SM8x30 FZB
12	4		MC6SM8x25 A2
11	8		MC6SM6x25 A2
10	2	Shrink tube	HB9126
9	1	Fotbåge Berollka Findus, Liberty_MIR	HE4302_MIR
8	1	Fotbåge Berollka Findus, Liberty	HE4302
7	4	Clamp Berollka Findus PT2	HE4301
6	4	Clamp Berollka Findus PT1	HE4187
5	2	Clamp Ø35	HC1357
4	1	Adapter plate, Berollka Findus_MIR	HE4190_MIR
3	1	Adapter plate, Berollka Findus	HE4190
2	2	Connection asm. x-small	HC1430
1	1	WA Connection center, x-small	HC1428

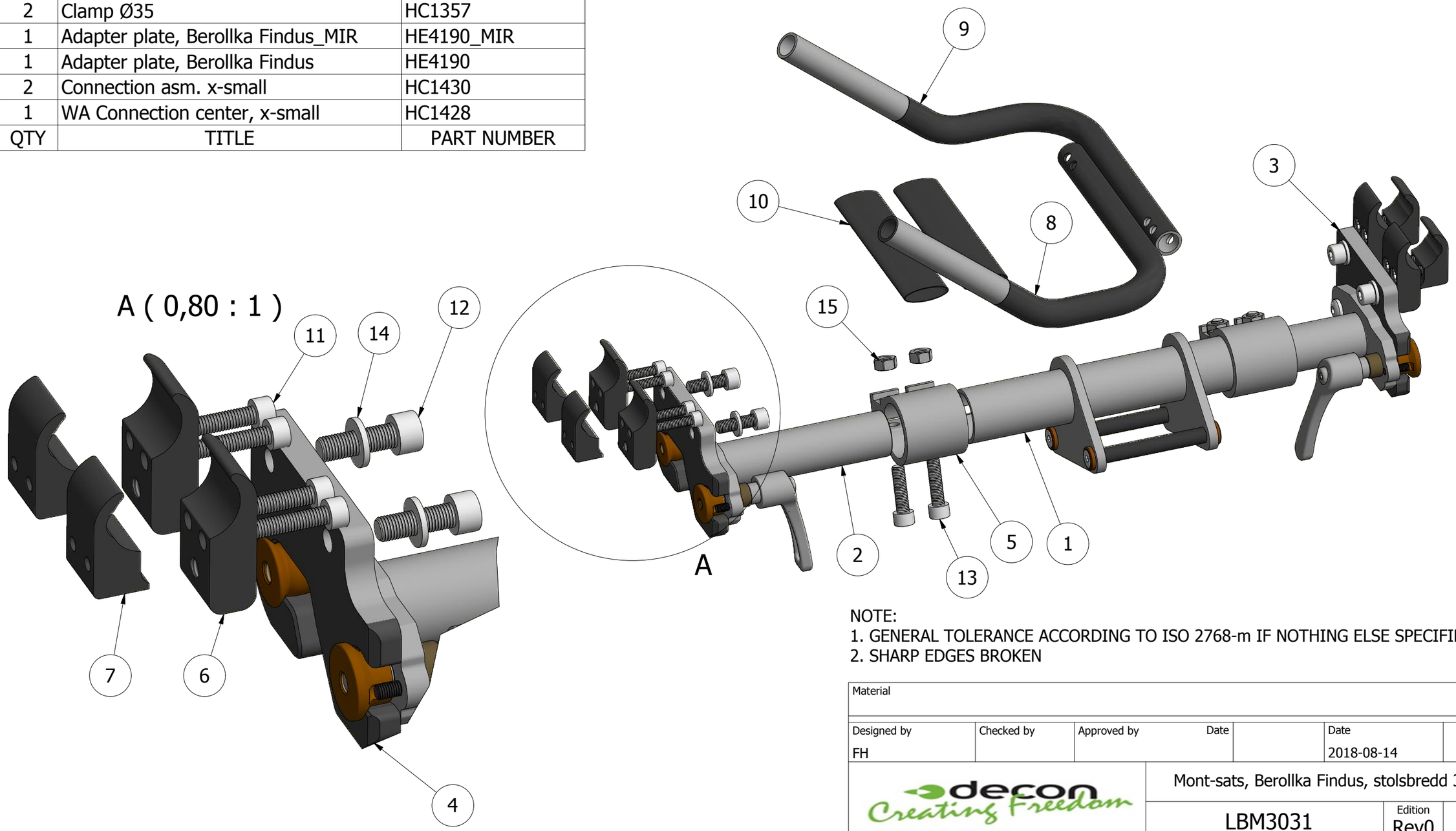

NOTE:
1. GENERAL TOLERANCE ACCORDING TO ISO 2768-m IF NOTHING ELSE SPECIFIED
2. SHARP EDGES BROKEN

Material					
Designed by FH	Checked by	Approved by	Date	Date 2018-08-14	
decon Creating Freedom	Mont-sats, Berollka Findus, stolsbredd 32-34				
	LBM3031			Edition Rev0	Sheet 1 / 1